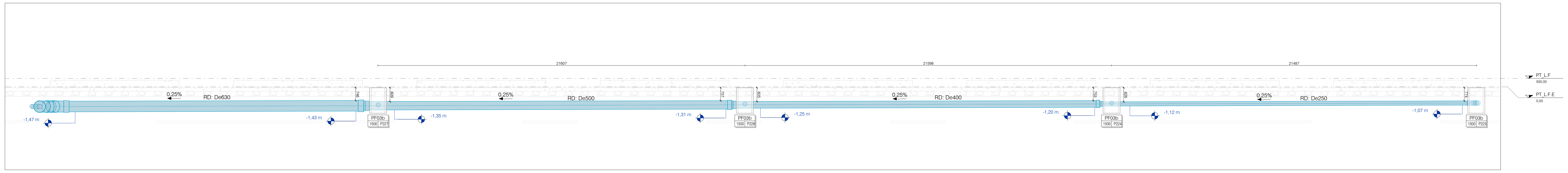

Section A-A
1 : 100

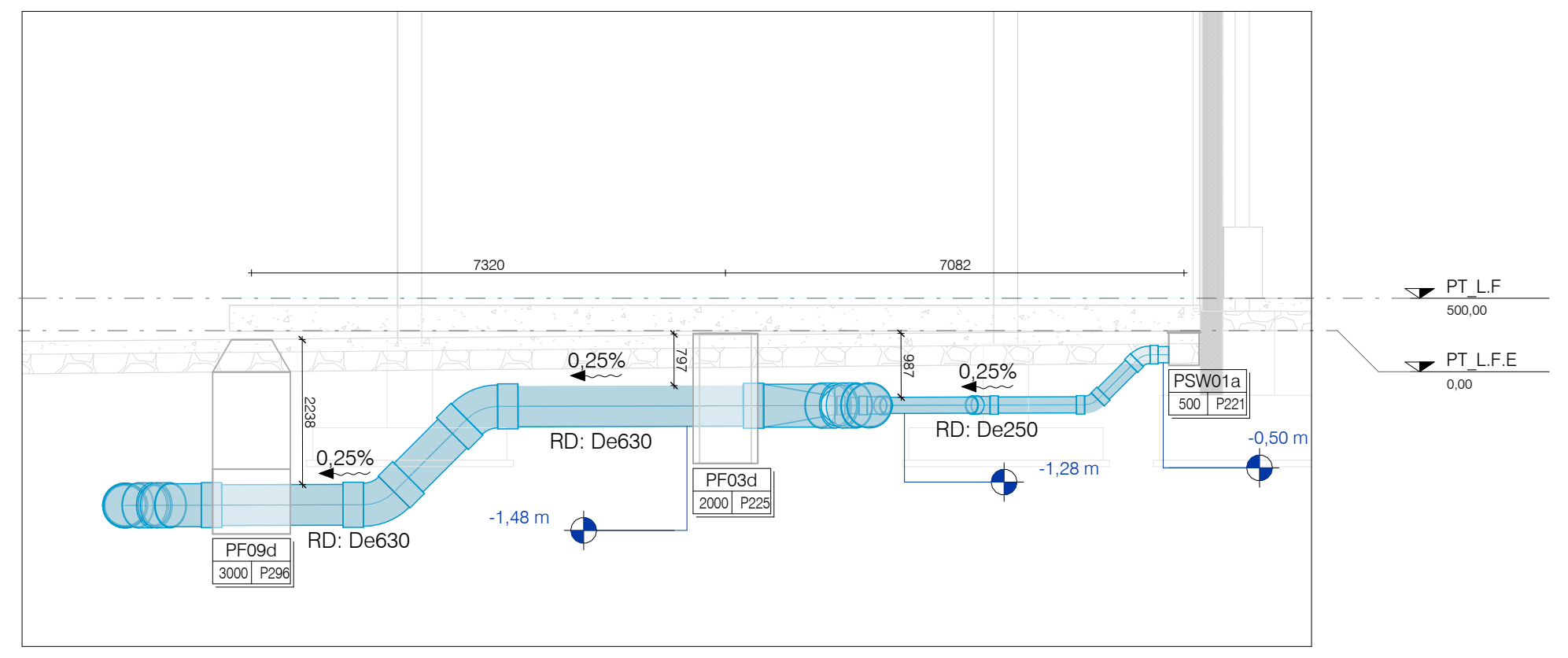

Section B-B
1 : 100

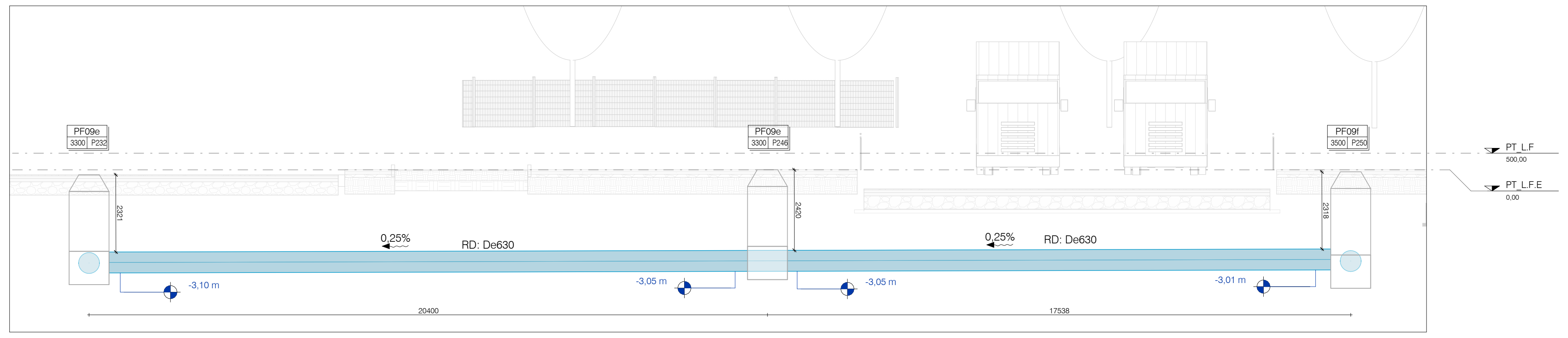

Section C-C
1 : 100

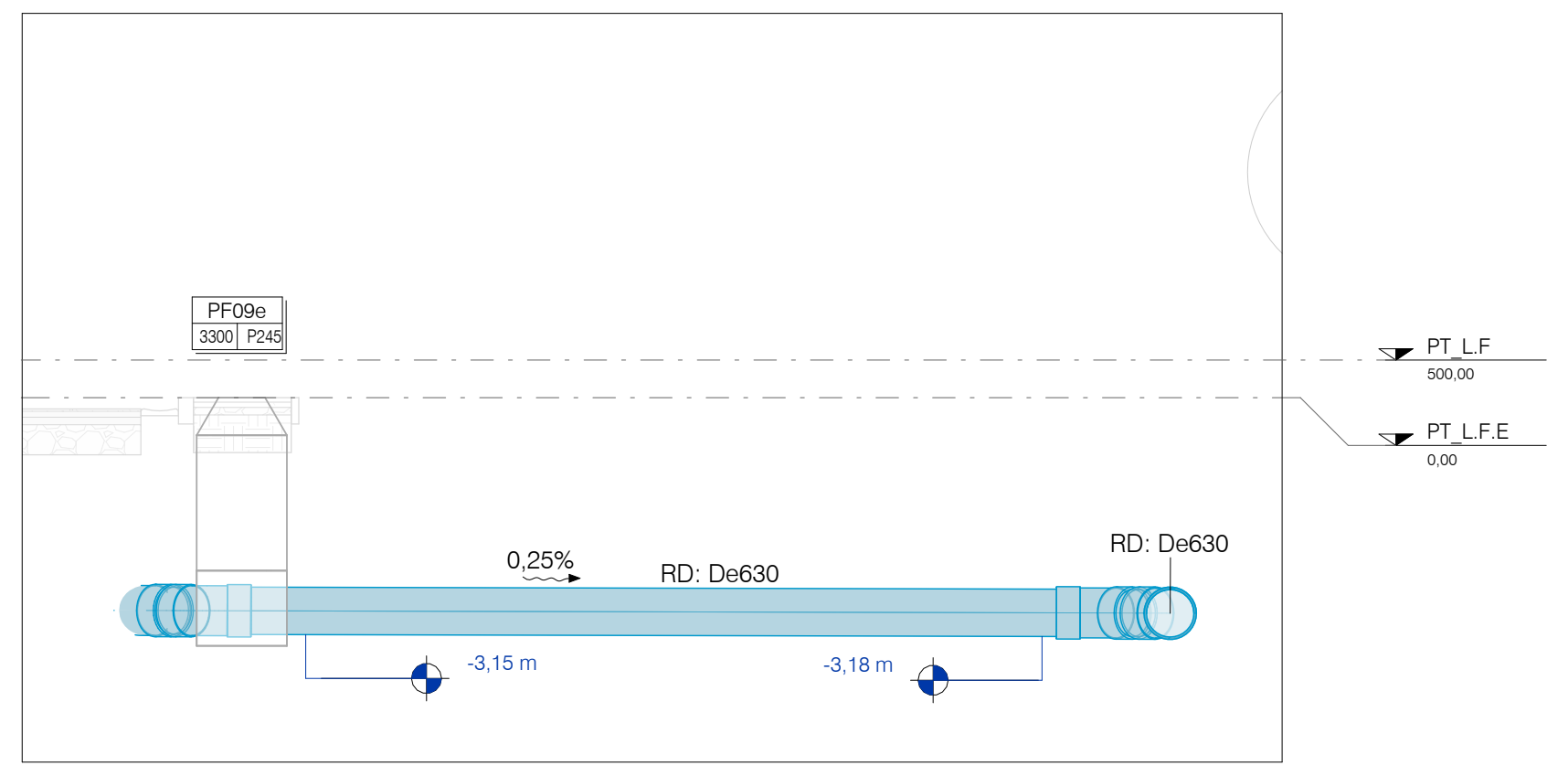

Section D-D
1 : 100

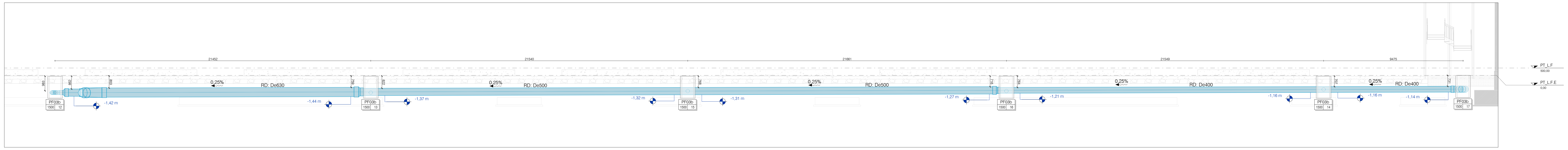

Section E-E
1 : 100

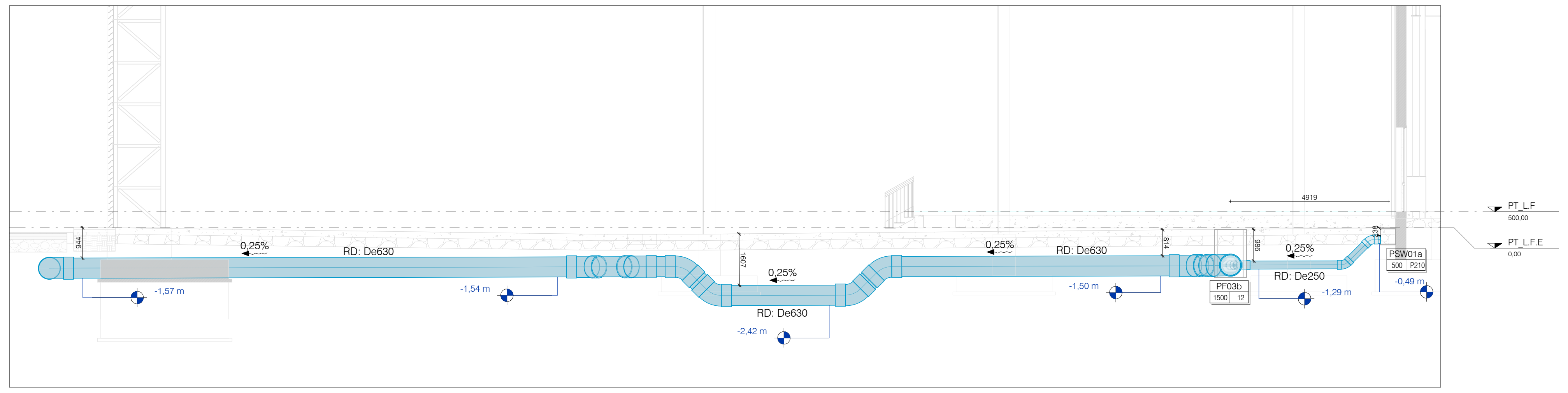

Section F-F
1 : 100

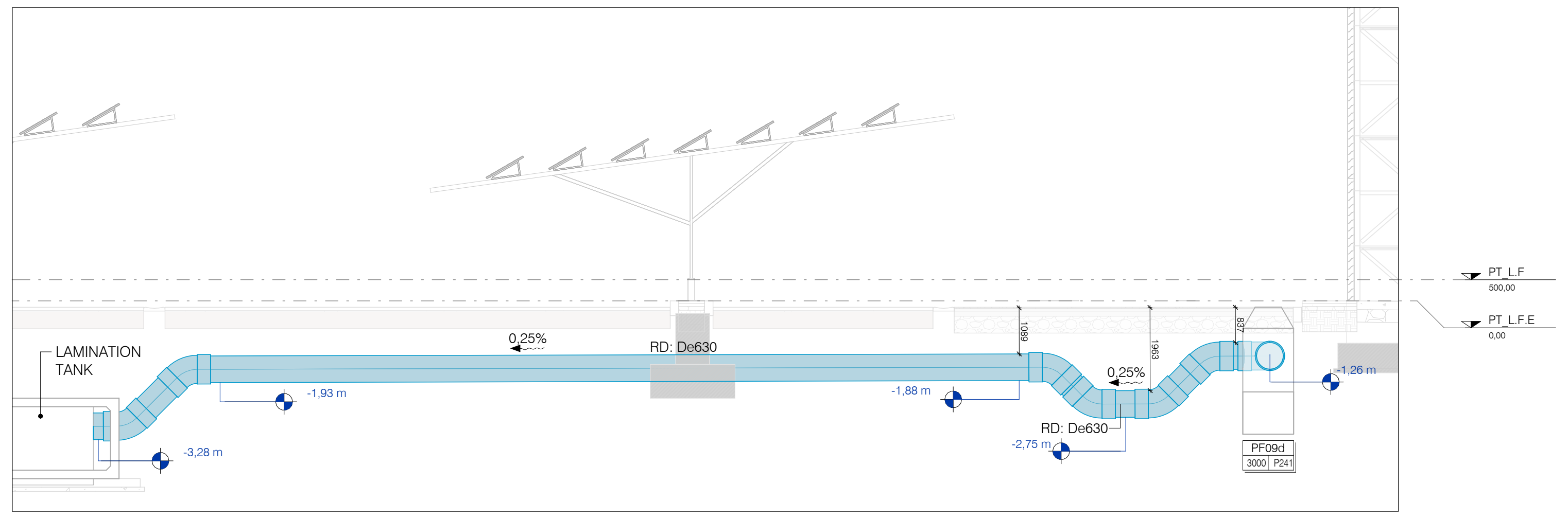

Section G-G
1 : 100

Manhole - Tag

Object code — PXXX
Height — XXX | YYY — progessive number

Object code — DXXX
Height — DXXX

DR - Legenda Tubazioni
DR - Pipe Systems Legend

DR	Scarico Acque Meteoriche *Rain Water*
DR	Scarico Acque Disoleate *Cleaned Oily Water*
▣	Pozzetto Ispezionabile - Chiusino Classe D400 *Inspectionable Manhole - Iron Cover Class D400*
◎	Pozzetto Ispezionabile - Chiusino Classe D400 *Inspectionable Manhole*
☐	Pozzetto Aperto *Open Manhole*
BOP -2,35 m	Quota Fondo Tubo - BOP *Bottom of Pipe's quote - BOP*

5200 Schedule Plumbing Fixtures

Type Mark	Length	Width	Diameter
PF01b	500,00	500,00	
PF03b	1000,00	1000,00	
PF03d	1000,00	1000,00	
PF09a			1200,00
PF09b			1200,00
PF09c			1200,00
PF09d			1200,00
PF09e			1200,00
PF09f			1200,00
PSW01a	500,00	500,00	
PSW01c	500,00	500,00	

NOTES PLUMBING AND DRAINAGE SYSTEMS:

- Supply piping for the water and sanitary utilities within the toilets will be made of multilayer from manifolds.
- In case of supply not derived from manifold, place recessed shut-off taps with cap for each water utility.
- Provide vents at high points and drains (connected to prepared manholes or conduits) at low points, in locations agreed with the DL.
- All drain risers should be equipped with inspectable siphon at the foot, extended above the roof and adequately ventilated.
- Condensate water collection networks must be separate and distinct from those into which they flow by the interposition of permanently wet or dry inspectable odor trap.
- Graywater collection networks must be separate and distinct from those into which they flow by the interposition of an inspectable siphon.
- Stormwater collection networks shall be separate and distinct from blackwater to the collection sumps located upstream of the Inspection/Siphon/Brace unit feeding to the public sewer.
- All discharges collected below the level of discharge to the public sewer shall be conveyed to collection and lifting tanks equipped with electric pumps.
- Testing operations should be carried out while keeping the drainage network continuously visible.
- Provide inspection points in manifolds upstream of each confluence, bend or special piece.
- All discharge pipes, both main and secondary, except where otherwise indicated, shall have the following minimum slopes:

service drains to sewer risers	i=2%.
blackwater / grease collectors	i=1%.
stormwater / condensate manifolds	i=0.5%.

TYPICAL DIAGRAM CONNECTION BETWEEN MANIFOLDS HAVING DIFFERENT ELEVATIONS

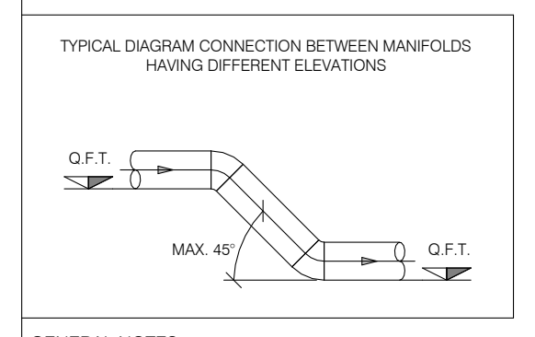

TYPICAL DIAGRAM DRAINS CONNECTIONS SECONDARY TO MAIN MANIFOLD

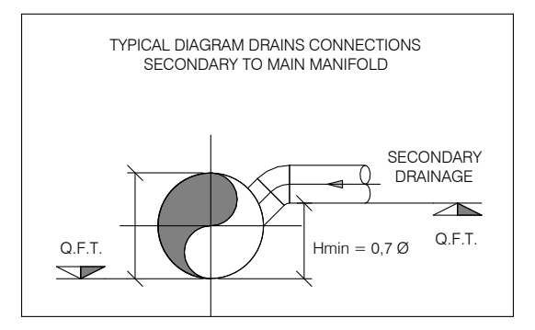

TYPICAL DIAGRAM PREEMPTIVE LIFTING PUMP CONNECTION WITH DISCHARGE NETWORK

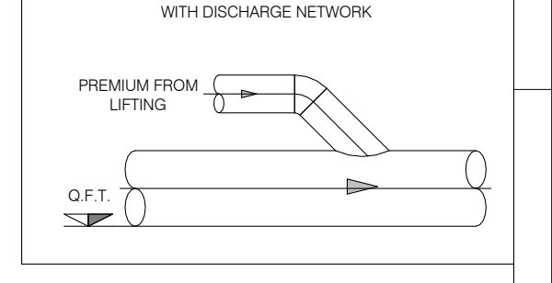

GENERAL NOTES:
- Drawing valid only for mechanical installations under contract.
- All measurements and locations of materials and equipment are to be verified on site by the contractor, who shall promptly report any interference with existing.
- Any undetected equipment shall be maintained; if necessary, it shall be modified and restored by the contractor.
- Exact locations of equipment, materials, piping, ducts, connection to existing facilities shall be determined by the contractor and submitted to the construction manager.
- Final sizing according to the manufacturer of the equipment and materials actually installed.
- All equipment must be easily maintainable and accessible via trapdoors or similar solutions even where not specifically specified.
- It will be the contractor's responsibility to size and asseverate all supports, in a workmanlike manner and in compliance with all regulatory requirements for earthquake-proofing.
- Construction detail drawings necessary for the proper execution of the work shall be arranged by the contractor.
- The installation of elements in the field must comply with all manufacturers' prescriptions and recommendations, good engineering rules on acoustics and fire prevention.
- All planned and described interventions, evaluated on the basis of the available documentation, should be re-evaluated and deepened during the works, after plant verification following appropriate surveys of the existing situation.
- The contractor must carefully check the design and report any inaccuracies, incompleteness or discrepancies with any standard or law.
-Connections between two or more sections of duct both with indoor units and with ducts themselves, shall be made only with invitation fittings and not with hammered derivations or detachments. The Contractor shall be responsible for making construction drawings showing the type of derivations and connections between ducts and ducts with the indoor units provided.

OTHER NOTES:
This submission has been prepared to provide an overview of the external systems, with the understanding that the RIBA4 Site project has not yet been finalized. As such, minor adjustments to the external networks may be required, particularly regarding their integration and coordination.
It is the responsibility of the General Contractor, during the RIBA5 design phase, to ensure that the systems are coordinated and compliant with the final RIBA4 project for the entire site. This includes alignment with the "CSA Drawings", "Telecom Design" and "Security Design" projects. Any necessary adjustments will be conducted in full compliance with the requirements and project needs defined in the RIBA4 design.

NOTE GENERALI
1. Il presente documento è valido solo per il progetto di "Disciplina".
2. Per la corretta interpretazione del disegno è necessaria la lettura congiunta di tutti gli elaborati di progetto e grafici.
3. Qualsiasi riproduzione, uso o modifica del progetto e dei disegni è strettamente vietata a meno di autorizzazione da parte del progettista, che rimane l'autore e il proprietario morale del progetto.
4. Il progetto è stato sviluppato seguendo strategie di mitigazione dell'impatto acustico che potrebbero subire modifiche a seguito della valutazione previsionale di impatto acustico.
5. Il progetto potrebbe subire modifiche a seguito dell'elaborazione della L10.
6. Tutte le quote sia altimetriche che dimensionali devono essere verificate e accuratamente rilevate in sito a cura dell'appaltatore dei lavori prima dell'esecuzione dei lavori, informare immediatamente la D.L. in caso di difformità.
7. Il progetto è stato sviluppato secondo una strategia antincendio, lo stesso potrebbe subire modifiche a seguito della redazione del Progetto di Prevenzione Incendi. In ogni caso tutti gli attraversamenti di solai o pareti che delimitano compartimenti antincendio, devono essere previste adeguate barriere tagliafiamma in modo da ripristinare la resistenza al fuoco.
8. Il progetto potrà essere oggetto di revisioni a seguito di ricezione commenti degli Enti Comunali alle pratiche amministrative.
9. Tutte le finiture e le colorazioni saranno da campionare e definire con la D.L. Architettonica.
10. Gli impianti meccanici ed elettrici a progetto potrebbero risultare complanari o coincidenti, non sono stati sviluppati eventuali abbassamenti di quota puntuali o spostamenti della distribuzione. In fase di progettazione costruttiva sarà necessario verificare il coordinamento interdisciplinare puntuale.
11. Tutti gli staffaggi ed i tiranti rappresentati nel progetto sono a solo titolo esemplificativo. I disegni tipologico devono dunque essere utilizzati come esempio per la realizzazione dei disegni costruttivi degli staffaggi. Prima dell'installazione in opera, l'Appaltatore dovrà sempre consegnare alla D.L., le relazioni di verifica di tenuta alle azioni sismiche.
12. Si ritiene esclusa dal presente appalto la fornitura delle apparecchiature disintermediate: armadi Rack di Telecomunicazione e dell'infrastruttura dati ad essi connessa; i Gruppi Elettrogeni comprensivi di serbatoio; la fornitura dei Moduli Elettrici prefabbricati; Chiller; Fan Wall.
13. L'elaborato mostra gli impianti indicati in oggetto e va letto insieme a tutti i documenti di appalto che contengono ulteriori dettagli e informazioni (capitolato, relazione, computo metrico).

GENERAL NOTES:
1. *This document is valid only for the "Subject" project.*
2. *For the correct interpretation of the drawing, it is necessary to read all project and graphic drawings together.*
3. *Any reproduction, use or modification of the design and drawings is strictly prohibited unless authorized by the designer, who remains the author and moral owner of the project.*
4. *The project has been developed following acoustic impact mitigation strategies that may be modified as a result of the Preliminary Predictive Noise Impact Assessment.*
5. *The project may be changed as a consequence of L10 drawing development.*
6. *All elevations, both elevational and dimensional, shall be verified and accurately surveyed on site by the work contractor prior to execution of the work, informing the DP immediately in case of discrepancies.*
7. *The project has been developed according to a fire strategy, the same may be modified following the development of the Fire Prevention Project. In any way all floor or wall penetrations bordering fire compartments, adequate fire barriers shall be provided so as to restore fire resistance.*
8. *The project may be subject to revisions following receipt of comments from the Municipal Authorities to the administrative files.*
9. *All finishes and color will be to be sampled and defined with the Architectural DP.*
10. *Mechanical and electrical systems as designed may be coplanar or coincident; any punctual lowering of elevations or shifts in dis*
11. *All brackets and tie-rods represented in the design are for illustrative purposes only. The type drawings should therefore be used as examples for the construction drawings of the stirrups. Prior to installation in place, the Contractor shall always deliver to the DP, the reports of verification of resistance to seismic actions.*
12. *It is considered excluded from this contract the supply of the disintermediate: Racks in the Data halls and the data infrastructure connected to them, the Diesel Generators including underground tank and all auxiliary systems (charging pipes, leakage monitoring system, etc.); the Prefabricated Modules; Chillers; Fan Walls.*
13. The elaborate shows the facilities indicated in the subject and should be read with all contract documents that contain further details and information (specifications, report, bill of quantities).

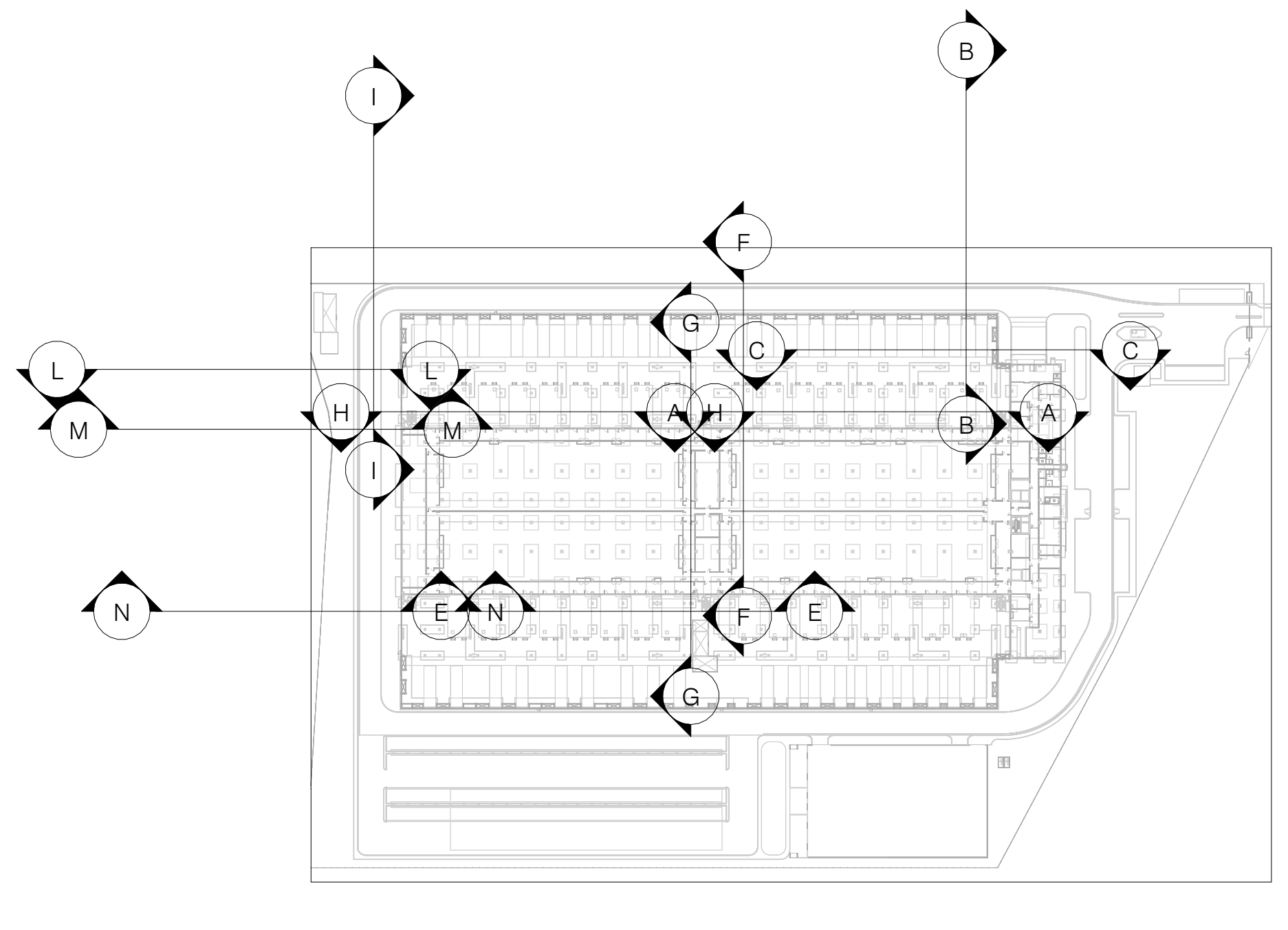

Firmato digitalmente da:
Roberto Cereda
Data: 01/08/2025 12:30:21

REV	DATA / DATE:	DESCRIZIONE / DESCRIPTION:
-	11/10/2024	RIBA4 - Undergroud Services

PROGETTISTA / DESIGNER:

L22 è una divisione di:
Lombardini22 S.p.A.
Via Lombardini 22 20143 Milano, Italia
T +39 02 36 59 62 00 F +39 02 83 20 13 97
info@l22.it www.l22.it

Black & White Engineering:
69 Wilson Street London, EC2A 2BB
United Kingdom
www.bw-engineering.com

STRUTTURE / STRUCTURE:

Ing. Arturo Donadio
S.P.S. S.r.l. www.spssrl-mi.it
Via M. Gioia, 64 - 20125 Milano, Italia
segreteria@spssrl-mi.it T. 02/6694887

COMMITTENTE / CLIENT:
INFRASTRUCTURE ITALIA LAND 5 S.r.l.
Via del Bosco Rinnovato, 6 Palazzo U4 20090 Assago (MI)

PROGETTO / PROJECT:
MIL 05A
Via Galileo Galilei SNC, Vignate (MI)

PROGETTISTA / DESIGNER:
Ing. Roberto Cereda - Iscritto all'Ordine degli Ing. di Brescia n°2609

OGGETTO / OBJECT:
RIBA 4 - MIL 05A

TITOLO / DESCRIPTION:
Sections_1/2 External Services
Rainwater Drainage System
Sezioni_1/2 Servizi Esterni
Scarichi Acque Meteoriche

DISEGNATO DA: DRAWN BY: L22	CONTROLLATO DA: CHECKED BY: L22
DATA/ DATE: 11/10/2024	SCALA / SCALE: 1:100
NOME FILE / FILE NAME: 4025_EM_5210-Z	
COMMESSA / JOB: 4025	FORMATO / SHEET: A0+
TAVOLA / DRAWING: EM_5210	
DATA REV.: 11/10/2024	REV.: -

© Lombardini22 S.p.A. ES DT (rev.-) (L.663/41 Art.2575)